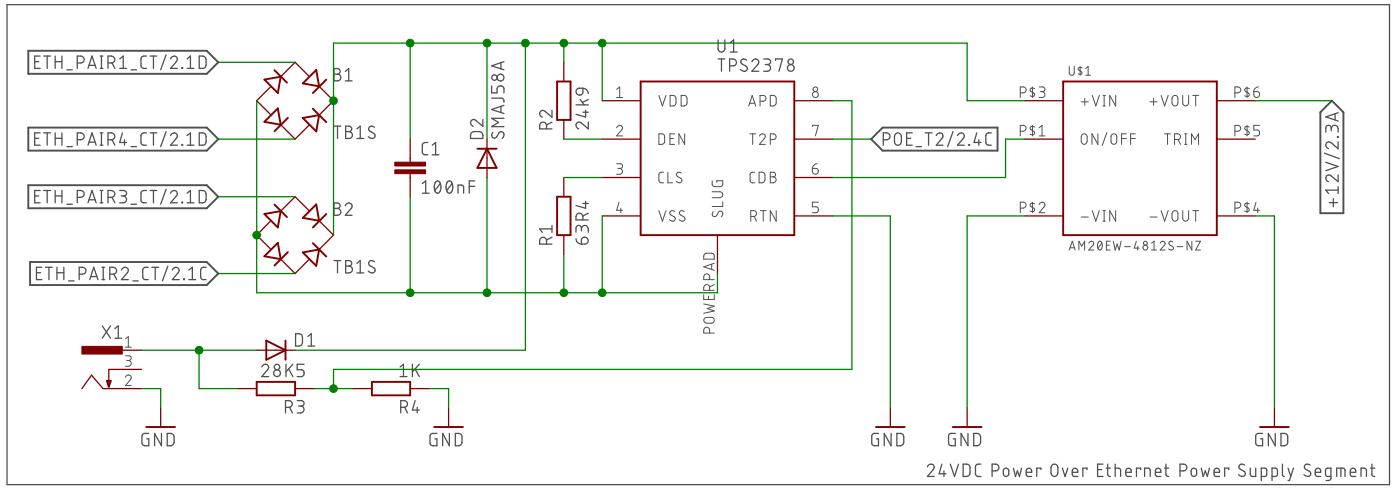

24VDC Power Over Ethernet Power Supply Segment

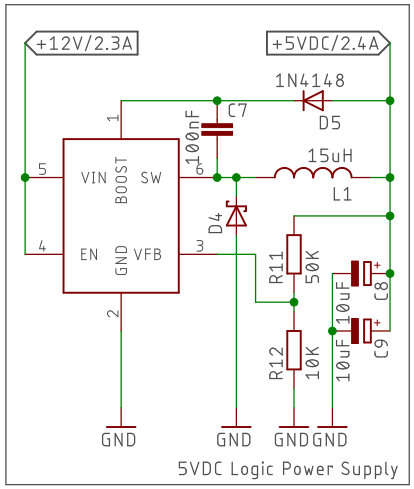

5VDC Logic Power Supply

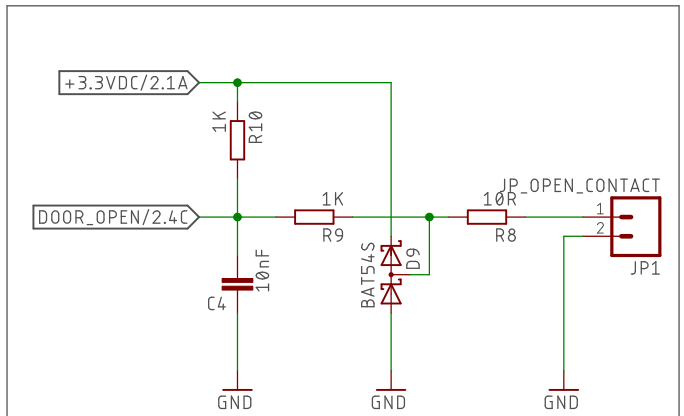

Open contact sensor input

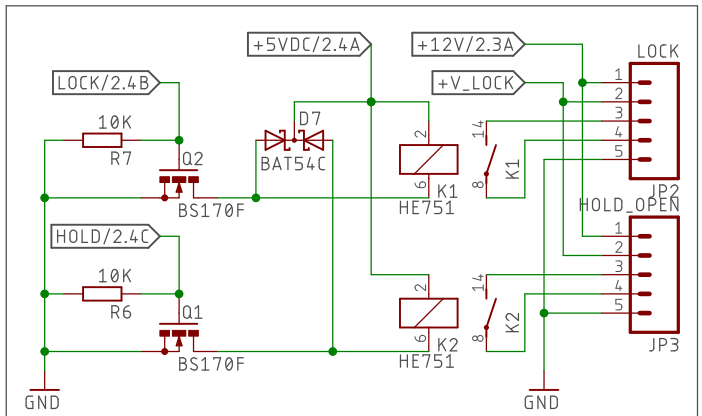

Lock and Hold-Open relays

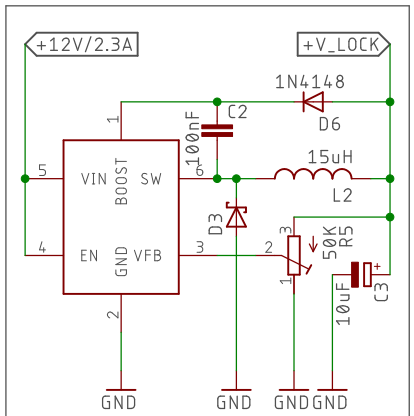

Lock power supply

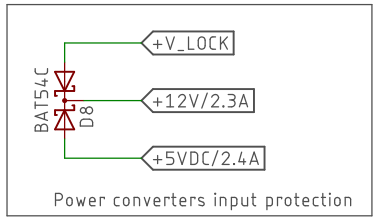

Power converters input protection

Note: Eagle labels have the following format:
LABEL_NAME/<SHEET>.<COORDINATES>

So +5VDC/2.1A does NOT meat 2.1 Amps, but that it is connected to Sheet 2 in section 1A

controller-c0m0

5/9/18 2:28 PM

Sheet: 1/2

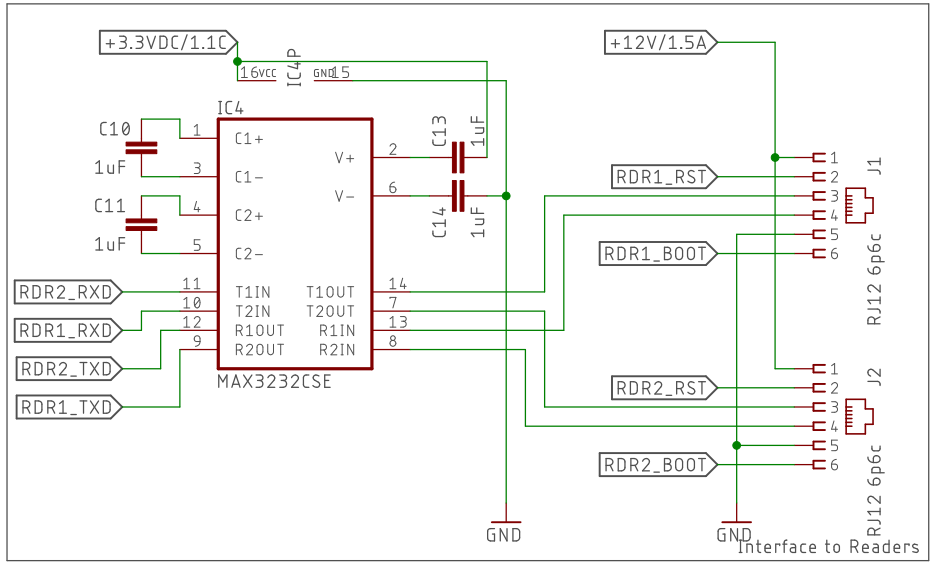

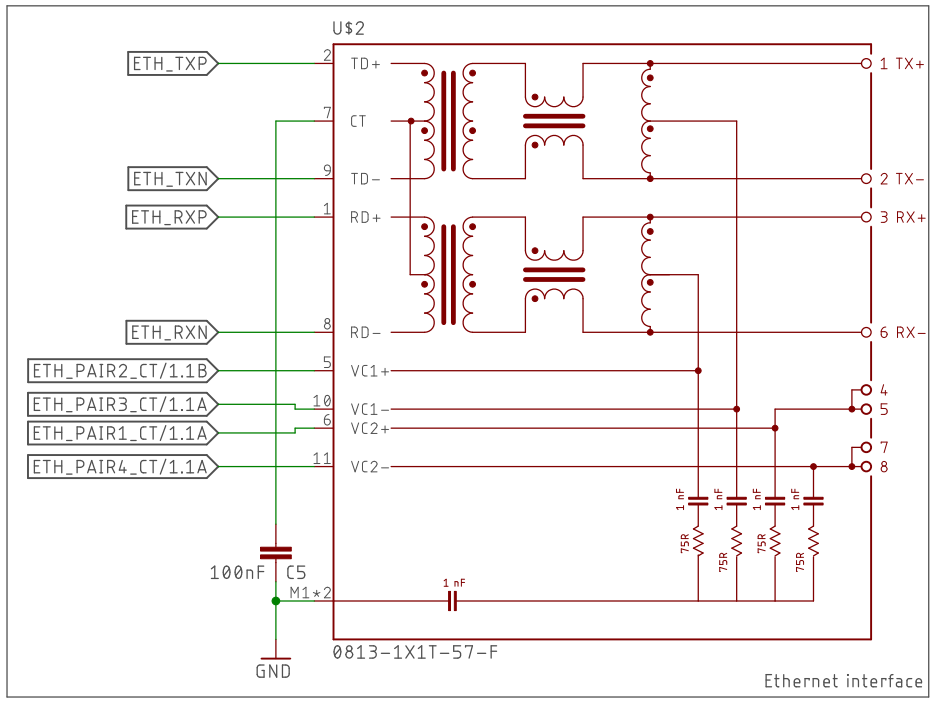

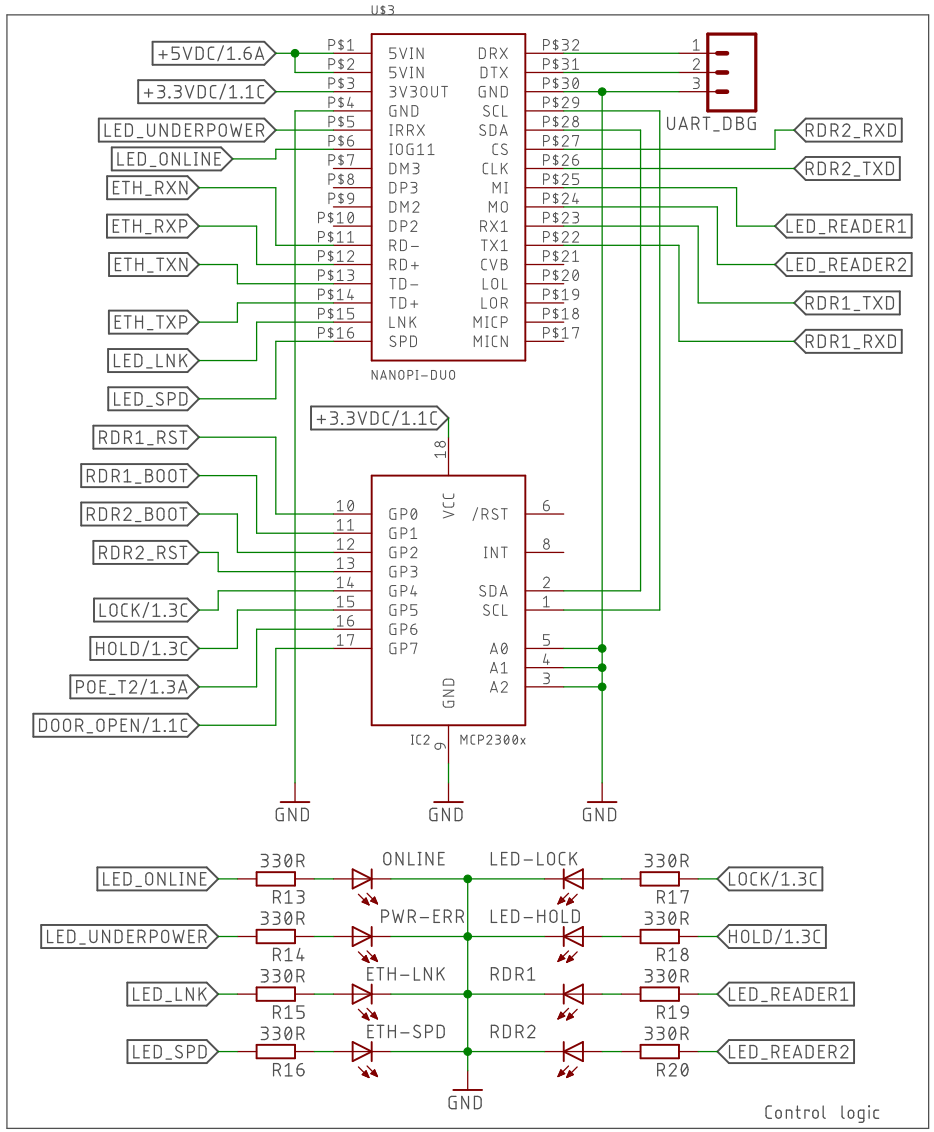

controller-c0m0	
5/9/18 2:28 PM	
Sheet: 2/2	